**BODY, HOOD - Z26NEY99A4/B4/A6/B6 (C750923)**

**2026 RZR - RZR XP S 1000 ULTIMATE (R01) - Z26NEY99A4/B4/A6/B6**

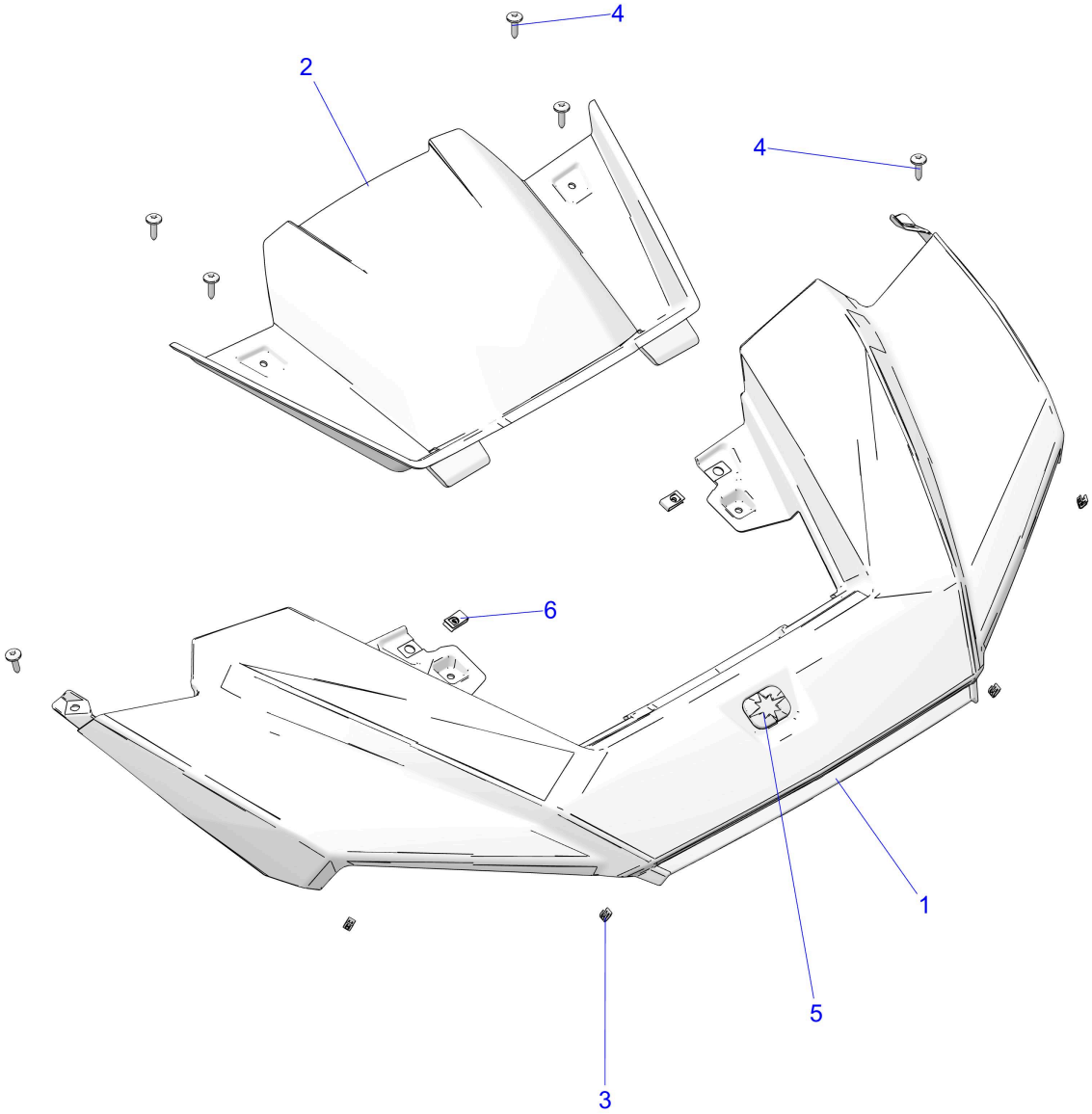


© 2025 Polaris Industries Inc.

C750923

| *Reference #* | *Part#* | *Description* | *Quantity* |
|---|---|---|---|
| 1 | 5466951-804 | PANEL-HOOD,FRT,MIC,STEALTH GR [A4/A6][STEALTH GRAY NON-METALLIC] | 1 |
| 1 | 5466951-902 | PANEL-HOOD,FRT,MIC,SAND DUNE [A5/B5][SAND DUNE NON-METALLIC] | 1 |
| 2 | 5456528-070 | HOOD CENTER,BLK | 1 |
| 3 | 5456313 | CLIP-TRIM, PLASTIC, WHITE | 4 |
| 4 | 7519650 | SCR-TXTH-M6X1.0X25 ZFB | AR |
| 5 | 2638610 | ASM-BADGE-POLARIS STAR LG,NFC [TO 12.2.2025] | 1 |
| 5 | 5270256 | BADGE-POLARIS STAR LG [FROM 12.2.2025] | 1 |
| 6 | 7081305 | CLIP-U SPEED NUT | 2 |

Copyright 1996-2026 Polaris Industries U.S.A All rights reserved.